797F
Mining Truck

Engine		
Engine Model	Cat C175-20	
Gross Power – SAE J1995	2983 kW	4,000 hp
Net Power – SAE J1349	2828 kW	3,793 hp

Weights – Approximate		
Gross Machine Operating Weight (GMW)	623 690 kg	1,375,000 lb
Operating Specifications		
Nominal Payload Capacity	363 tonnes	400 tons

797F Features

High Engine Performance
The Cat C175-20 engine offers the perfect balance between power, robust design and economy.

Power Shift Transmission
Electronic Clutch Pressure Control (ECPC) gives the 797F seven speed transmission smooth shifts while providing constant power and efficiency for peak power train performance.

Reliable Mechanical Drive System
The Cat mechanical drive power train provides unmatched operating efficiency.

Robust Braking
Cat oil-cooled, multiple disc brakes offer exceptional, fade resistant braking in all haul road conditions.

Truck Body
A variety of Caterpillar designed and built bodies and liners ensure optimal performance and reliability in tough mining applications.

Comfortable Cab
Large, spacious cab offers unmatched visibility and exceptional operator comfort.

Enhanced Serviceability
Designed with improved serviceability points and grouped service locations so more time is spent on the haul road.

Contents

Power Train – Engine 3
Power Train – Transmission 4
Engine/Power Train Integration.....5
Cat Braking System 6
Truck Body Systems 7
Structures.....8
Operator's Station 9
Monitoring System.....10
Safety 11
Sustainability 12
Customer Support.....13
Serviceability.....14
797F Mining Truck Specifications 15
797F Standard Equipment.....23
797F Optional Equipment.....24
Notes.....25

The Cat 797 is the leader in its class and the 797F continues this tradition with advancements in safety, productivity, serviceability and comfort. Whether hauling copper, coal, iron ore, gold or overburden, the 797F will deliver the lowest cost-per-ton. Combine the features of the 797F with unmatched dealer support and you will see why more people choose Cat Mining Trucks for their production needs.

Power Train – Engine

The Cat® C175-20 engine is built for power, reliability and efficiency.

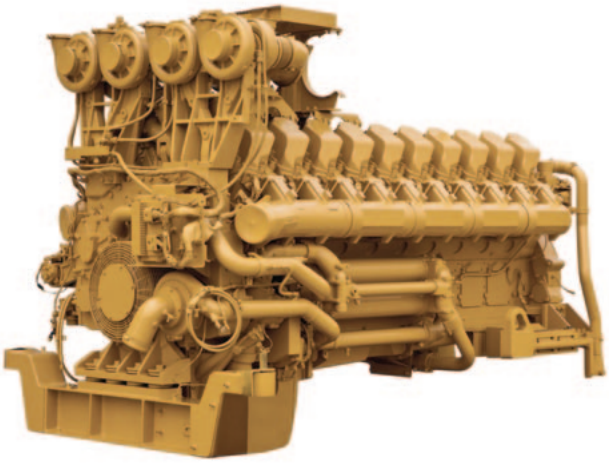

Engine

The Cat® C175-20 quad turbocharged and air-to-air aftercooled diesel engine has enhanced power management capability for maximum hauling performance in the most demanding mining applications.

Design

The C175-20 is a 20 cylinder, single block, four stroke design that uses long, effective power strokes for optimum efficiency.

EPA Compliant

Where applicable, the Cat C175-20 engine is compliant with U.S. Environmental Protection Agency emissions requirements.

Long Life

High displacement, low rpm rating and conservative power ratings mean more time on the haul roads and less time in the shop.

Cat Common Rail Fuel System

The electronically-controlled system senses operating conditions and regulates fuel delivery for optimum fuel efficiency. This precise and flexible fuel system gives the engine the ability to meet emission regulations without sacrificing performance, reliability or durability.

Cooling System

The MESABI™ Radiator comes standard on the 797F. The flexible core design offers long life, high durability and easy serviceability.

Starter

The tank on the air start system is ground level for easy serviceability.

Power Train – Transmission

More power to the ground for greater productivity.

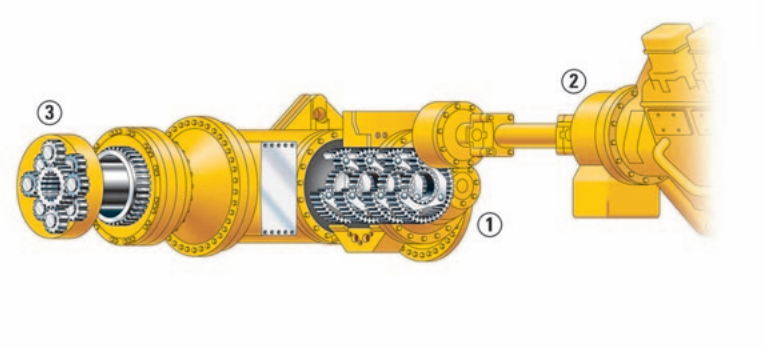

Mechanical Power Train

The Cat mechanical drive power train and powershift transmission provides unmatched operating efficiency and control on steep grades, in poor underfoot conditions and on haul roads with high rolling resistance.

1 – Transmission

The Cat seven speed, planetary power shift transmission is matched with the C175-20 engine to deliver constant power over a wide range of operating speeds.

- Robust Design – Designed for the higher power of the C175-20 engine, the proven planetary power shift transmission is built tough.
- Long life – A dedicated oil tank and circuit provides cooler, cleaner oil for maximum performance and longer component life.

Electronic Clutch Pressure Control

ECPC provides maximum performance, smooth shifting, long clutch life and a more comfortable ride.

2 – Lock-Up Torque Converter

Combines maximum rimpull and cushioned shifting of torque converter drive with the efficiency and performance of direct drive. The lock-up torque converter engages at approximately 8 km/h (5 mph), delivering more power to the wheels.

3 – Final Drives

Cat final drives work as a system with the planetary power shift transmission to deliver maximum power to the ground. Built to withstand the forces of high torque and impact loads, double reduction final drives provide high torque multiplication to further reduce drive train stress.

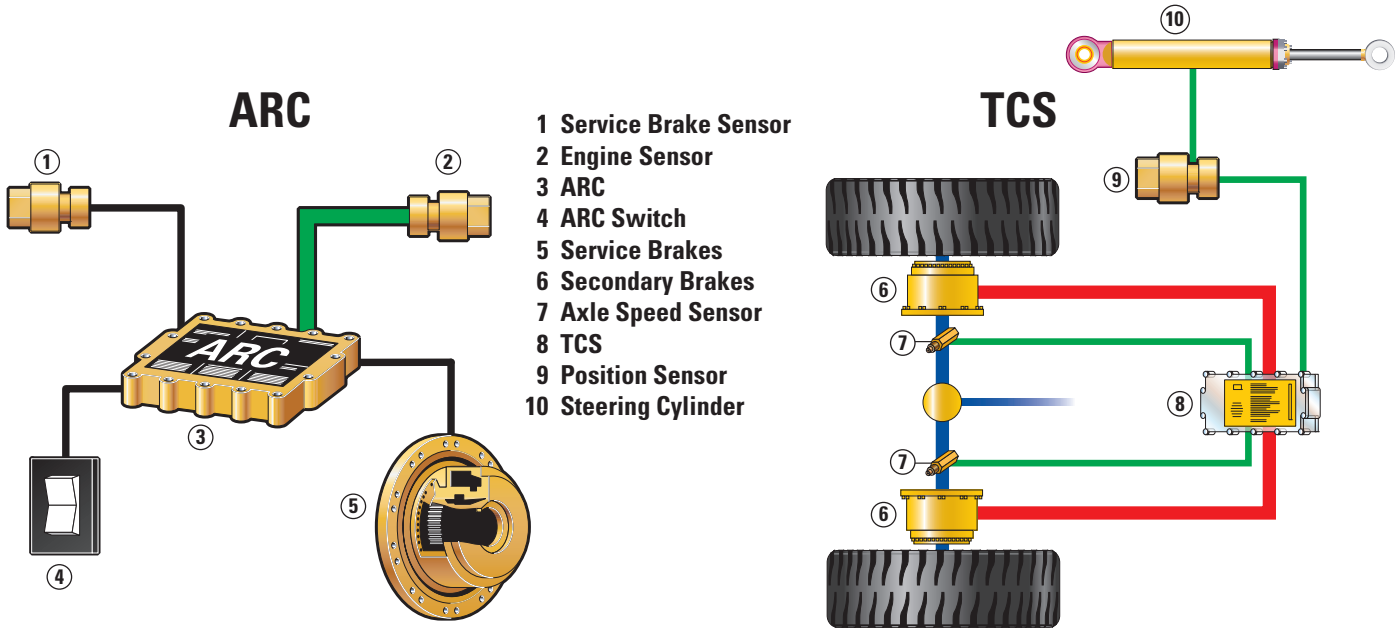

Engine/Power Train Integration

Electronically combined power train components optimize performance.

Cat Data Link

Electronically integrates machine computer systems to optimize overall power train performance, increase reliability and component life and reduce operating costs.

Body-Up Shift Inhibitor

Prevents the transmission from shifting above the pre-programmed gear without the body fully lowered. The machine can move forward but the speed is limited to avoid excessive racking when pulling away from a dump site.

Overspeed Protection

The transmission control electronically senses engine conditions and automatically up-shifts one gear to prevent overspeeding.

Programmable Top Gear

Transmission top gear maximum can be set using the Cat Electronic Technician service tool to help the operator maintain speed limits.

Downshift Inhibitor

Prevents engine overspeeding by keeping the transmission from downshifting until engine speed reaches the downshift point.

Controlled Throttle Shifting

Regulates engine rpm during shifting to reduce power train stress and clutch wear by controlling engine speed, torque converter lock-up and transmission clutch engagement for smoother shifts and longer component life.

Reverse Speed Inhibitor

Prevents shifts into reverse when forward ground speeds are in excess of 4.8 km/h (3 mph).

Cat Braking System

Superior braking control lets operators focus on productivity.

Integrated Braking System

The Cat, oil-cooled braking system delivers reliable performance and control in extreme haul road conditions. The integrated system combines the service, secondary, parking brakes and retarding functions in the same system for optimum braking efficiency that does not burn fuel while retarding.

Oil-Cooled Multiple Disc Brakes

Cat four wheel, forced oil-cooled, multiple disc brakes are continuously cooled by water-to-oil heat exchanger for exceptional, non-fading braking and retarding performance.

Brake Design

Cat, oil-cooled disc brakes are designed with large discs and plates for reliable, adjustment-free operation and performance. Brakes are completely enclosed and sealed to prevent contamination and reduce maintenance.

Long Life

An oil film prevents direct contact between the discs. This design absorbs the braking forces by shearing the oil molecules and carrying heat away to extend brake life.

Parking Brake

Oil-cooled, spring-applied, hydraulically released parking brake is applied to all four wheels for superior parking capability on all grades up to 15 percent.

Hydraulic Automatic Retarder Control (ARC)

Hydraulically activated, automatic retarder control system electronically controls retarding on grade to maintain optimum engine rpm and brake system performance. ARC is now adjustable in each gear.

Retarding

The 797F offers two options for retarding. Flat/Uphill Haul option is the standard configuration and provides a simplified system for less maintenance. For those applications requiring downhill loaded operation, an optional configuration increases retarding capability.

MSDII Body

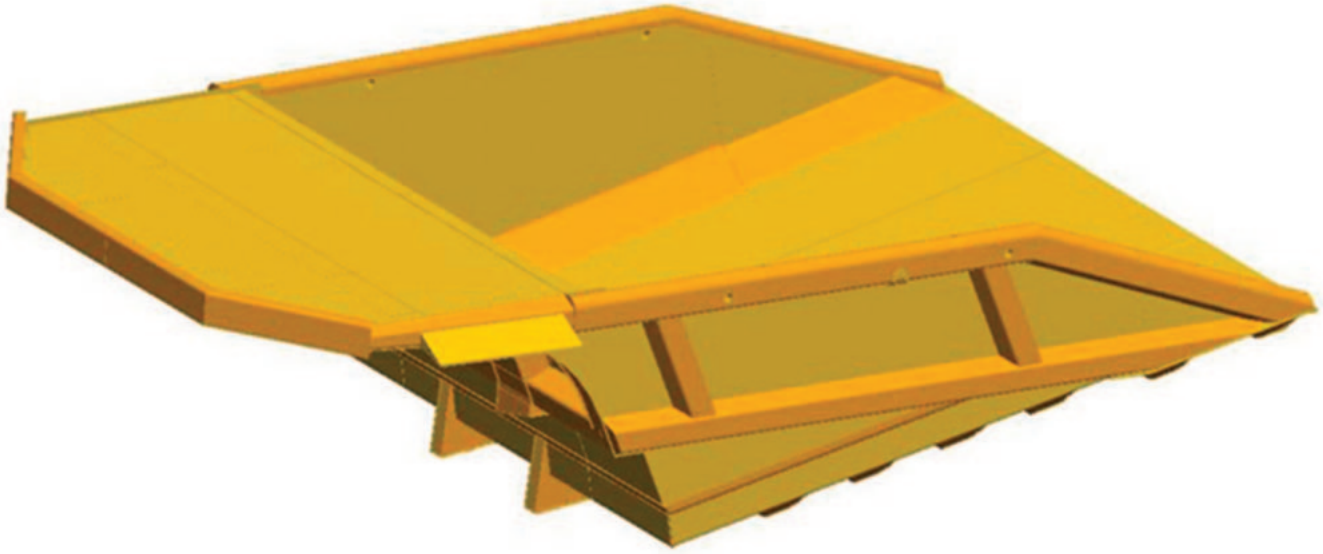

Truck Body Systems

Cat designed and built for rugged performance and reliability.

Cat Truck Bodies

The 797F is offered with four MSD II (Mine Specific Design) body options in conjunction with a configurable liner system to achieve the most efficient hauling solutions at the lowest-cost-per-ton.

Body Selection

The Cat truck body program is committed to providing the most efficient and highest value body solution for your operation. By studying your mine site and understanding the overall operational requirements and constraints, the body can be configured to meet the unique needs of your application.

MSD II Body

The MSD II bodies are the number one choice in the mining industry. The internal body shells are designed and manufactured for superior impact and wear protection. Coupled with the Cat mine specific design process the MSD II bodies optimize the balance of payload and durability.

Truck Body Liners

A variety of liner options are available to save weight and extend body life through impact and wear management. The mine specific design system is utilized to provide you with the optimum liner for long life at your mine site.

Structures

Superior Cat structures are the backbone of the 797F's durability.

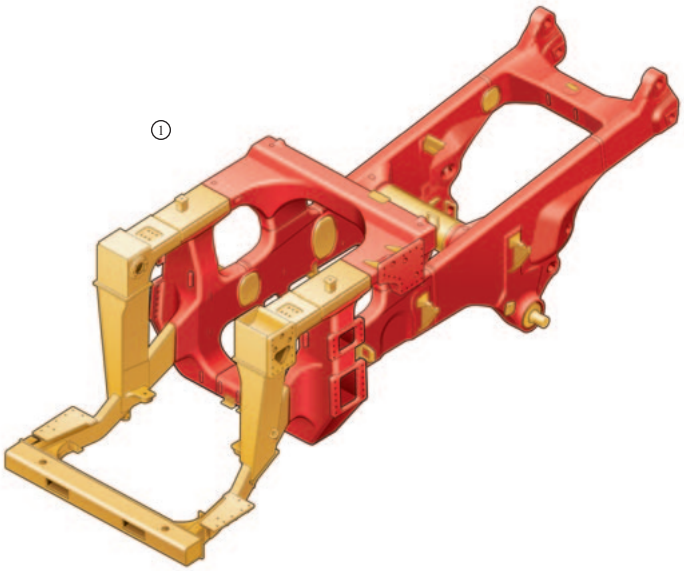

Box Section Design

The 797F uses a box-section design, incorporating two forgings and 14 castings in high stress areas with deep penetrating and continuous wrap-around welds to resist damage from twisting loads without adding extra weight.

- **Steel Structures**

Mild steel used throughout frame provides flexibility, durability and resistance to impact loads, even in cold climates and allows for easy field repairs.

- **Castings**

Castings account for 80 percent of the frame's weight and are key to providing durability in some of the world's toughest conditions. The large radii castings are resilient to frame flexing and ensure long life.

Integral Four-Post Cab

Resiliently mounted to the frame to reduce vibration and sound, the integral ROPS is designed as an extension of the truck frame.

Suspension System

Designed to dissipate haul road and loading impacts for longer frame life and a more comfortable ride.

- **Durable Design**

Rugged cylinders utilize large diameter bore and low pressure nitrogen/oil design for long life with minimal maintenance.

- **Front**

Front cylinders with preset caster and camber are mounted on the frame and serve as steering kingpins for a tight turning radius with excellent maneuverability and low maintenance.

- **Rear**

Rear cylinders allow oscillation and absorb bending and twisting stresses caused by uneven and rough haul roads rather than transmitting them to the main frame.

Four-Bar Link Rear Suspension

The four-bar link suspension transfers and supports loads to the frame more efficiently than an A-frame design and allows more service area around the transmission.

Steering System

Hydraulic steering control system is designed for exceptional smoothness and precise control. A separate circuit prevents cross contamination for long life.

1. Yellow – Fabrications, Red – Castings

Operator's Station

Ergonomically designed for all-day comfort, control and productivity.

Enhanced Operator Visibility

Through the use of Caterpillar the fully Integrated Object Detection System, RADAR AND CAMERA, the operator can receive both audible and visual indications of detected objects.

Ergonomic Layout

The all new F-Series operator station is ergonomically designed for total machine control in a comfortable, productive and safe environment. All controls, levers, switches and gauges are positioned to maximize productivity and minimize operator fatigue.

Viewing Area

Designed for excellent all-around visibility and clear sight lines to the haul road, the large viewing area offers exceptional visibility, allowing the operator to maneuver with confidence for high productivity. The air cleaners have been relocated to the front of the truck, allowing the operator increased visibility.

1) Air Suspension Seat with Three-Point Operator Restraint 2) Hoist Lever 3) Secondary Brake Pedal 4) Monitoring System 5) Steering Column 6) Transmission Controls 7) Gauges 8) Storage Compartment 9) Air Suspension Trainer Seat 10) Operator Window 11) Operator Controls 12) Heating/Air Conditioning 13) Four-Post ROPS 14) Camera System Monitor (optional) 15) MineStar Monitor (optional) 16) Cup Holder 17) Dome Courtesy Lights

Monitoring System

Vital machine health and payload data keeps production at peak levels.

VIMS™ 3G Monitoring System

The third generation VIMS™ monitoring system provides critical health and payload data in real-time to keep the 797F performing at top production levels. Sensors throughout the machine enable VIMS to quickly exchange and monitor information from all systems. Users can view up to 10 different machine parameters at a time. Service technicians can quickly download data and generate reports in the office, shop or cab by connecting directly to the system. On-board, various levels of alerts provide operators with notification and severity of abnormal machine health conditions. Data can be used to improve effectiveness of scheduled maintenance programs, maximize component life, improve machine availability and lower operating costs.

Production and Payload Management

Information is available to monitor and enhance truck/loading tool effectiveness, improve fleet productivity and help extend the life of truck frames, tires, rims and power train components, while lowering operating and maintenance cost.

External Payload Indicators

External lights signal loading tool operators when to cease loading for optimum payloads without overloading. Optional payload displays with digital numeric monitor are available.

Road Analysis Control

Optional system monitors haul road conditions by measuring frame rack, bias and pitch to improve cycle times, frame life, tire life and fuel efficiency.

VIMSpc

Off-board software reporting program that allows service personnel to download a complete record of machine health and productivity data. Health and payload reports can be generated for more effective machine management which reduces downtime and lowers operating costs.

Advisor Display

The Advisor display provides real-time machine performance and basic trip, maintenance and diagnostic data. Various machine parameters can be viewed on the display including coolant temperature, oil pressure, current gear selection, current payload and more.

VIMS Supervisor

Optional software allows mine personnel to easily manage and interpret VIMS data for optimum fleet management and productivity.

Safety

Cat mining machines/systems are designed with safety as the first priority.

Product Safety

Caterpillar has been and continues to be proactive in developing mining machines that meet or exceed safety standards. Safety is an integral part of all machine and system designs.

Access and Egress

Improvements for machine level access and egress include a standard 600 mm (24 in) diagonal stairway across the front of the machine. Improvements for ground level access include an optional powered access stairway.

Integrated Object Detection Systems

Object Detection Systems are factory installed as standard equipment on 797F mining trucks. The fully Integrated Object Detection System, RADAR AND CAMERA, provides both audible and visual indications of detected objects. This system uses a combination of short and medium range radars which surround the machine, along with cameras on each side to allow the operator to confirm the detected object. The cameras supplement the radar alerts and are selectable by touch screen menus through an intuitive interface.

Overload Policy

Safety is integral to maintaining the highest productivity in mining operations. The Cat 10/10/20 Overload Policy assures that steering and braking systems have sufficient capacity to perform, even at 20 percent overload.

Other Safety Features

• Slip resistant surfaces • 76 mm (3 in) wide orange, three-point operator restraint • Wide angle mirrors • Body raised indicator • Body retaining cables • Guard rails • Reverse neutralizer when dumping • Low interior sound level

Isolation Box

Lockout, tagout box mounted on front bumper includes engine shutdown switch, battery lockout, starter lockout and transmission lockout.

SAFETY.CAT.COM™

Sustainability

A variety of features improve sustainability in areas of decreasing waste, extending component life and lowering emissions levels.

Sustainabilty Features

The 797F Mining Truck offers continuous rear axle filtration, extended life filters and extended maintenance intervals which aid in decreasing the amount of waste contributed to our environment.

Engines with Advanced Technology

Engines with advanced technology contribute less emissions to the environment while maintaining fuel efficiency.

Advanced Surface Technology (AST)

Advanced Surface Technology (AST) is a replacement for hard chrome coatings on some steel parts, including suspension and hoist cylinder rods. This technology improves wear resistance and reduces repair time. Chrome has been eliminated to reduce environmental impact.

Fuel Efficiency

The engine provides additional retarding by running against compression on downhill hauls. During retarding applications the engine ECM does not inject fuel into the cylinders for exceptional fuel economy.

Customer Support

Caterpillar has the most experienced dealer network in the world.

Commitment Makes the Difference

Cat dealers offer a wide range of solutions, services and products to help you lower costs, enhance productivity and manage your operation more efficiently. From the time you select a piece of Cat equipment until you trade or sell it, the support you get from your Cat dealer makes the difference.

Dealer Capability

Cat dealers provide the level of support you need on a global scale. Dealer expert technicians have the knowledge, experience, training and tooling necessary to handle your repair and maintenance needs, when and where you need them.

Product Support

When Cat products reach the field, they are supported by a worldwide network of parts distribution facilities, dealer service centers and technical training facilities to keep your equipment up and running. Cat customers rely on prompt, dependable parts availability through our global dealer network, meeting your needs 24/7.

Service Support

Cat equipment is designed and built to provide maximum productivity and operating economy throughout its working life. Cat dealers offer a wide range of service plans that will maximize uptime and return on your investment, including:

- Preventive Maintenance Programs
- Diagnostic Programs, such as Scheduled Oil Sampling and Technical Analysis
- Rebuild and Reman Options
- Customer Support Agreements

Application Awareness

Operating and maintenance costs are influenced by many application and site-specific factors, such as: material density, loading position, payload, grades, speeds, haul road design and maintenance. Your Cat dealer can provide you with an understanding of the effects application characteristics and operating techniques have on maintenance and operating costs.

Operation

Your Cat dealer offers training programs to help operators improve productivity, decrease downtime, reduce operating costs and enhance safety.

Serviceability

Reduced maintenance time results in more productivity.

Servicing Ease

Easy access to daily service points simplifies servicing and reduces time spend on regular maintenance procedures. Enhanced serviceability and long service intervals are designed to increase machine availability and productivity.

In-Frame Access

Permits easy access to major components for easy servicing and removal.

Ground Level Access

Grouped ground level points allow convenient servicing of tanks, filters, drains, batteries, AutoLube system, pressure taps, screens, fluid sight gauges and engine shutdown. Ground level VIMS data port permits easier downloading of information.

AutoLube

Automatic lubrication system reduces maintenance time by automatically lubricating necessary components on a regular basis.

Scheduled Oil Sampling

S•O•S℠ sampling valves speed sampling and analysis reliability.

Sealed Electrical Connectors

Electrical connectors are sealed to lock out dust and moisture. Harnesses are braided for protection. Wires are color-coded for easy diagnosis and repair.

Engine

Engine Model	Cat C175-20	
Gross Power – SAE J1995	2983 kW	4,000 hp
Net Power – SAE J1349	2828 kW	3,793 hp
Bore	175 mm	6.9 in
Stroke	220 mm	8.7 in
Displacement	106 L	6,469 in^3

- Power ratings apply at 1,750 rpm when tested under the specific conditions for the specified standard.
- Ratings based on SAE J1995 standard air conditions of 25° C (77° F) and 99 kPa (29.32 Hg) barometer. Power based on fuel having API gravity of 35 at 16° C (69° F) and an LHV of 42 780 kJ/kg (18,390 Btu/lb) when engine is used at 30° C (38° F).
- No low altitude arrangement (LAA) engine derating required up to 2134 m (7,000 ft) altitude.
- No high altitude arrangement (HAA) engine derating required up to 4877 m (16,000 ft) altitude.
- EPA Compliant. Where applicable, the Cat C175-20 engine is compliant with U.S. Environmental Protection Agency emissions requirements.

Weights – Approximate

Gross Machine Operating Weight (GMW)	623 690 kg (1,375,000 lb)
Body Weight Range	41 368-61 235 kg (91,200-135,000 lb)
Chassis Weight Range	210 630-219 146 kg (464,359-483,134 lb)

- Refer to the Cat Mining Truck 10/10/20 Payload Policy for maximum gross machine weight limitations.
- Body weight varies depending on body and liner configuration. Weight range for known applications.
- Chassis weight with 100 percent fuel, hoist, body mounting group, rims and tires.

Operating Specifications

Nominal Payload Capacity	363 tonnes	400 tons
Heaped SAE (2:1) Capacity	240-267 m^3	314-350 yd^3
Top Speed – Loaded	67.6 km/h	42 mph
Steer Angle	40 Degrees	
Machine Clearance Turning Diameter	42 m	138 ft

Final Drives

Differential Ratio	1.276:1
Planetary Ratio	16.67:1
Total Reduction Ratio	21.26:1

- Double reduction, planetary with full floating axles.

Transmission

Forward 1	11.3 km/h	7 mph
Forward 2	15.2 km/h	9.5 mph
Forward 3	20.5 km/h	12.7 mph
Forward 4	27.7 km/h	17.2 mph
Forward 5	37.2 km/h	23.1 mph
Forward 6	50.3 km/h	31.2 mph
Forward 7	67.6 km/h	42 mph
Reverse	11.9 km/h	7.4 mph

Suspension

Effective Cylinder Stroke – Front	313.6 mm	12.3 in
Effective Cylinder Stroke – Rear	165.1 mm	6.5 in
Rear Axle Oscillation	±4.0 degrees	

Body Hoists

Pump Flow – High Idle	1200 L/min	317 gal/min
Relief Valve Setting – Raise	24 200 kPa	3,510 psi
Body Raise Time – High Idle	25 Seconds	
High Idle Body Lower Time – Float	19 Seconds	

Brakes

Number of Discs per Side – Front	10	
Number of Discs per Side – Rear	15	
Outside Diameter	1067 mm	42 in
Brake Surface	330 517 cm^2	51,243 in^2
Standards	J-ISO 3450 JAN88, ISO 3450-1996	

Approximate Weights – MSD II

Front Axle – Empty	47.2%
Front Axle – Loaded	33.3%
Rear Axle – Empty	52.8%
Rear Axle – Loaded	66.7%

Weight Distributions – Approximate

Front Axle – Empty	47.2%
Rear Axle – Empty	52.8%
Front Axle – Loaded	33.3%
Rear Axle – Loaded	66.7%

Capacity – MSD II – 100% fill factor

Struck	188-213 m^3	246-290 yd^3
Heaped (SAE 2:1)	240-267 m^3	314-350 yd^3

- Consult your local Cat dealer for truck body recommendations.

Service Refill Capacities

Fuel Tank	3785 L	1,000 gal
Cooling System	1160 L	306 gal
Crankcase	319 L	84 gal
Front Wheels, Each	61 L	16 gal
Final Drives, Each	185 L	49 gal
Differentials	1176 L	311 gal
Steering Tank	254 L	67 gal
Steering System (Includes Tank)	355 L	94 gal
Brake/Hoist Hydraulic Tank	825 L	28 gal
Brake/Hoist System (Includes Tank)	1670 L	441 gal
Brake/Hoist Tank	830 L	219 gal
Torque Converter Sump	303 L	80 gal
Torque Converter/ Transmission System (Includes Sump)	629 L	166 gal

Tires

Tire	59/80R63 – Michelin or Bridgestone

- Productive capabilities of the 797F are such that, under certain job conditions, TKPH (TMPH) capabilities of standard tires could be exceeded and, therefore, limit production.

ROPS

ROPS Standards

- ROPS (Rollover Protective Structure) for cab offered by Caterpillar meets ISO 3741:1994 ROPS criteria.
- FOPS (Falling Objects Protective Structure) meets ISO 3449:1992 Level II FOPS criteria.

Sound

Sound Standards

- The operator sound pressure level measured according to work cycle procedures specified in ISO 6394 and 6396 is 76 dB(A) for cab offered by Caterpillar when properly installed and maintained and tested with doors and windows closed.
- Hearing protection may be needed when operating with an open operator station and cab (when not properly maintained or doors/windows open) for extended periods or in a noisy environment.

Steering

Steering Standards	SAE J15111 OCT90, ISO 5010:1992

Dimensions

All dimensions are approximate.

Dimensions are with standard body 290-6420.

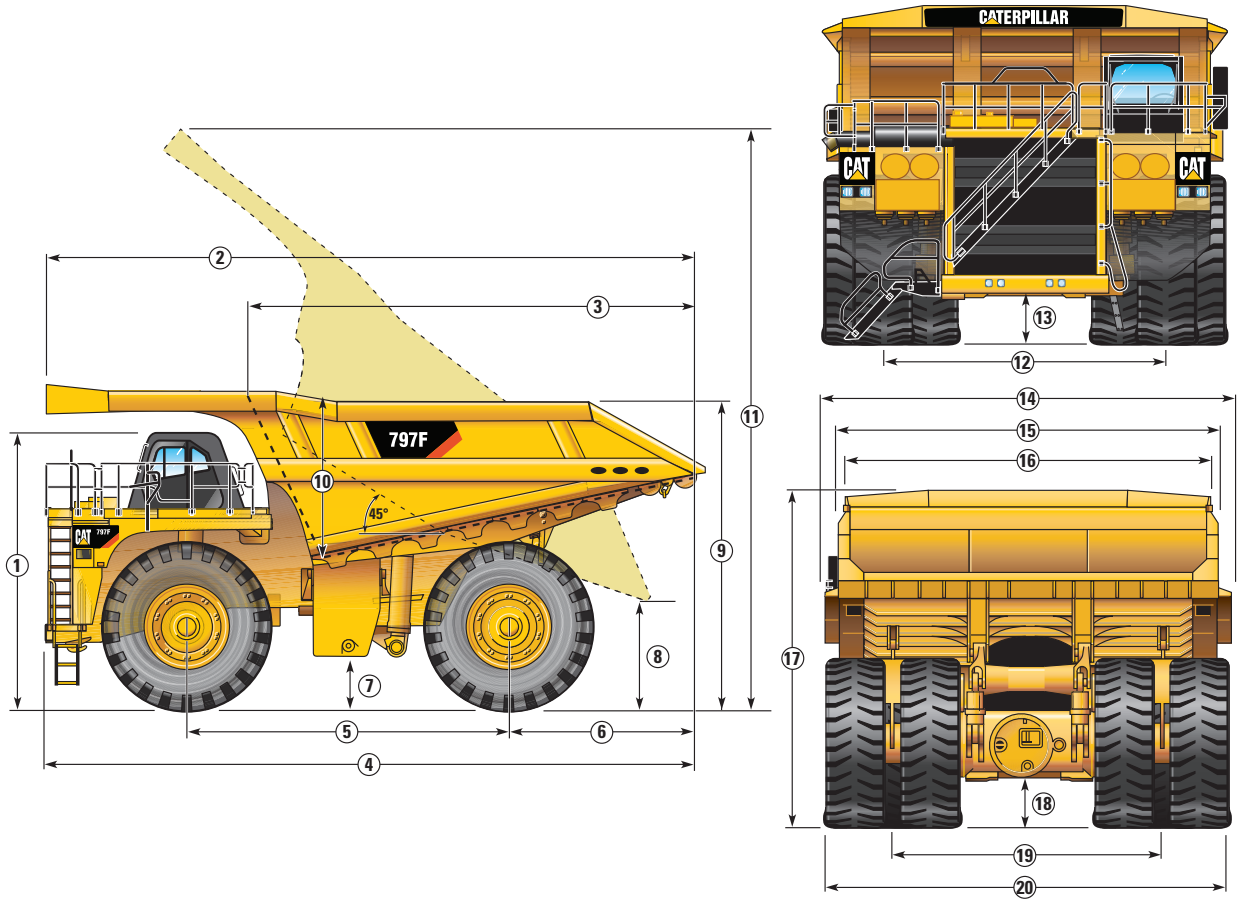

1	Height to Top of ROPS – Empty	6526 mm	21 ft 5 in
2	Overall Body Length	14 802 mm	48 ft 7 in
3	Inside Body Length	9976 mm	32 ft 9 in
4	Overall Length	15 080 mm	49 ft 6 in
5	Wheelbase	7195 mm	23 ft 7 in
6	Rear Axle to Tail	3944 mm	12 ft 11 in
7	Loaded Ground Clearance	786 mm	2 ft 7 in
8	Dump Clearance	2017 mm	6 ft 7 in
9	Loading Height – Empty	6998 mm	23 ft 0 in
10	Inside Body Depth – Maximum	3363 mm	11 ft 0 in
11	Overall Height – Body Raised	15 701 mm	51 ft 6 in
12	Centerline Front Tire Width	6534 mm	21 ft 5 in
13	Engine Guard Clearance – Loaded	1025 mm	3 ft 4 in
14	Outside Body Width	9755 mm	32 ft 0 in
15	Overall Canopy Width	9116 mm	29 ft 11 in
16	Inside Body Width	8513 mm	27 ft 11 in
17	Front Canopy Height – Empty	7709 mm	25 ft 4 in
18	Rear Axle Clearance – Loaded	947 mm	3 ft 1 in
19	Centerline Rear Dual Tire Width	6233 mm	20 ft 5 in
20	Overall Tire Width	9529 mm	31 ft 3 in

797F Gradeability/Speed/Rimpull*

To determine gradeability performance: Read from gross weight down to the percent of total resistance. Total resistance equals actual percent grade plus 1% for each 10 kg/t (20 lb/ton) of rolling resistance. From this weight-resistance point, read horizontally to the curve with the highest obtainable gear, then down to maximum speed. Usable rimpull will depend upon traction available and weight on drive wheels.

- - - - - Typical Field Empty Weight
..... Gross Machine Operating Weight
623 690 kg (1,375,000 lb)

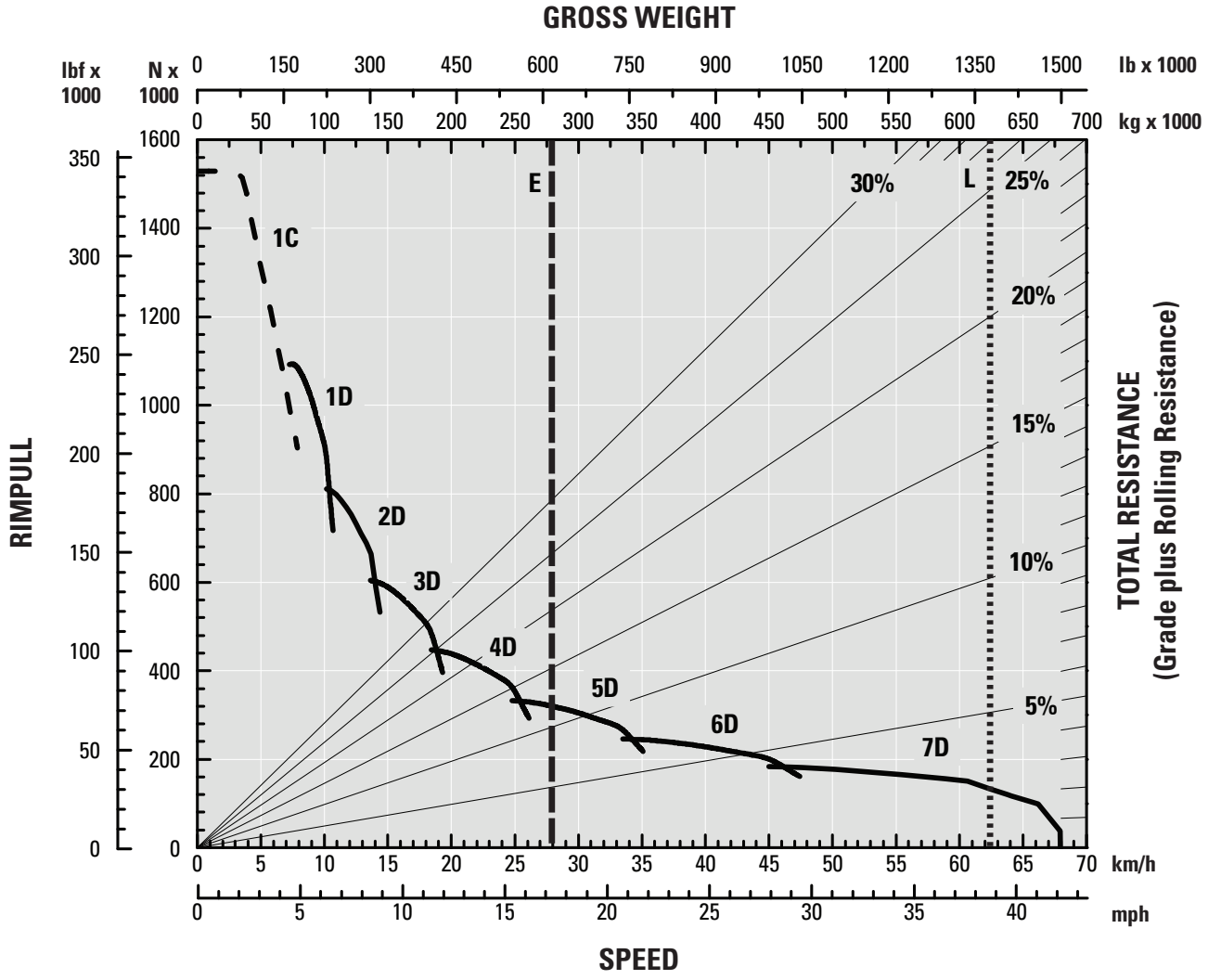

1 – 1st Gear
2 – 2nd Gear
3 – 3rd Gear
4 – 4th Gear
5 – 5th Gear
6 – 6th Gear

E – Empty
L – Loaded
* at sea level

- - - Torque Converter Drive
——— Direct Drive

797F Steep (Downhill Haul) Retarding – Continuous*

To determine retarding performance: Add lengths of all downhill segments and, using this total, refer to proper retarding chart. Read from gross weight down to the percent effective grade. Effective grade equals actual % grade minus 1% for each 10 kg/t (20 lb/ton) of rolling resistance. From this weight-effective grade point, read horizontally to the curve with the highest obtainable gear, then down to maximum descent speed brakes can properly handle without exceeding cooling capacity. The following charts are based on these conditions: 32° C (90° F) ambient temperature, at sea level, with 59/80R63 tires.

NOTE: Select the proper gear to maintain engine rpm at the highest possible level, without overspeeding the engine. If cooling oil overheats, reduce ground speed to allow transmission to shift to the next lower speed range.

Typical Field Empty Weight

Gross Machine Operating Weight
623 690 kg (1,375,000 lb)

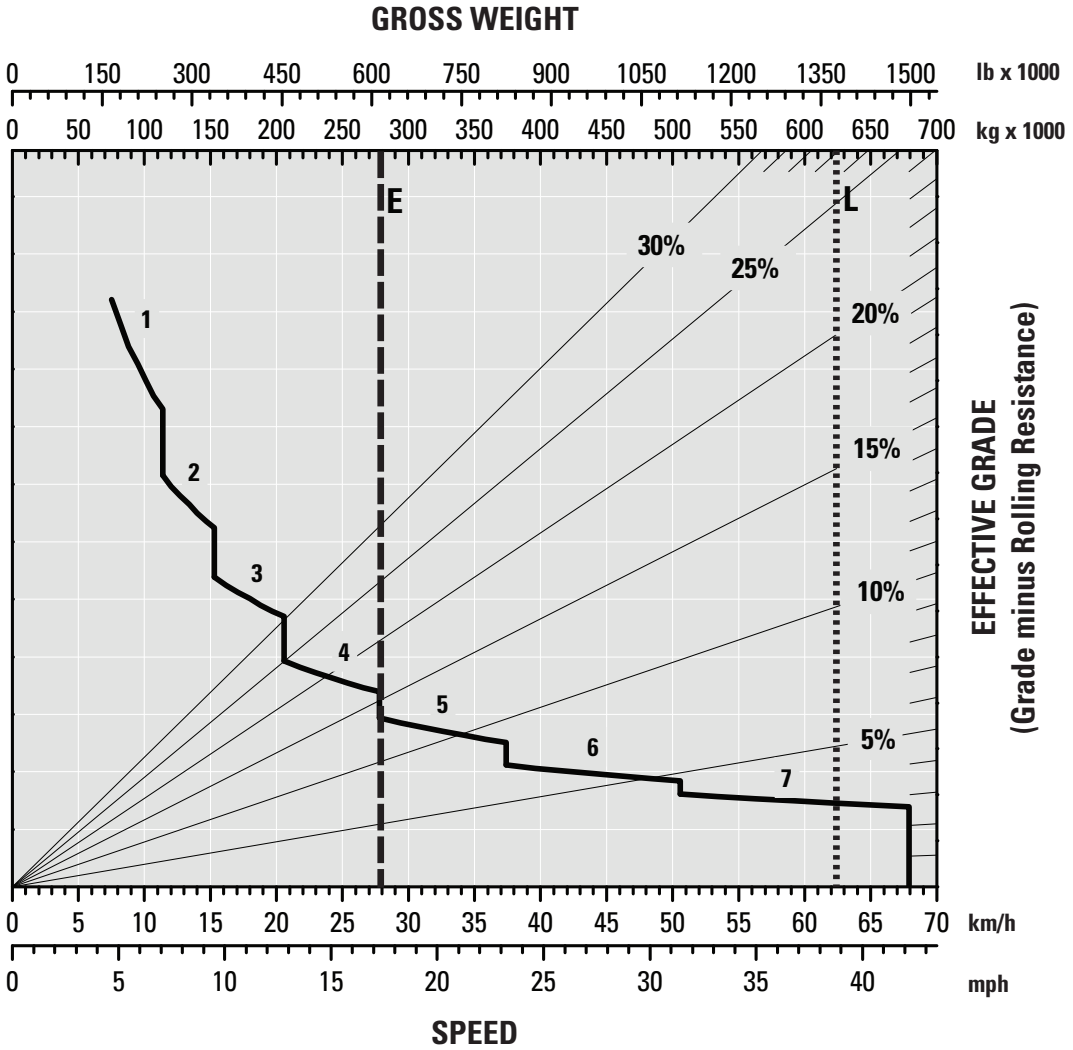

1 – 1st Gear
2 – 2nd Gear
3 – 3rd Gear
4 – 4th Gear
5 – 5th Gear
6 – 6th Gear

E – Empty
L – Loaded
*** at sea level**

797F Steep (Downhill Haul) Retarding – 450 m (1,475 ft)*

Typical Field Empty Weight

Gross Machine Operating Weight
623 690 kg (1,375,000 lb)

1 – 1st Gear
2 – 2nd Gear
3 – 3rd Gear
4 – 4th Gear
5 – 5th Gear
6 – 6th Gear

* at sea level

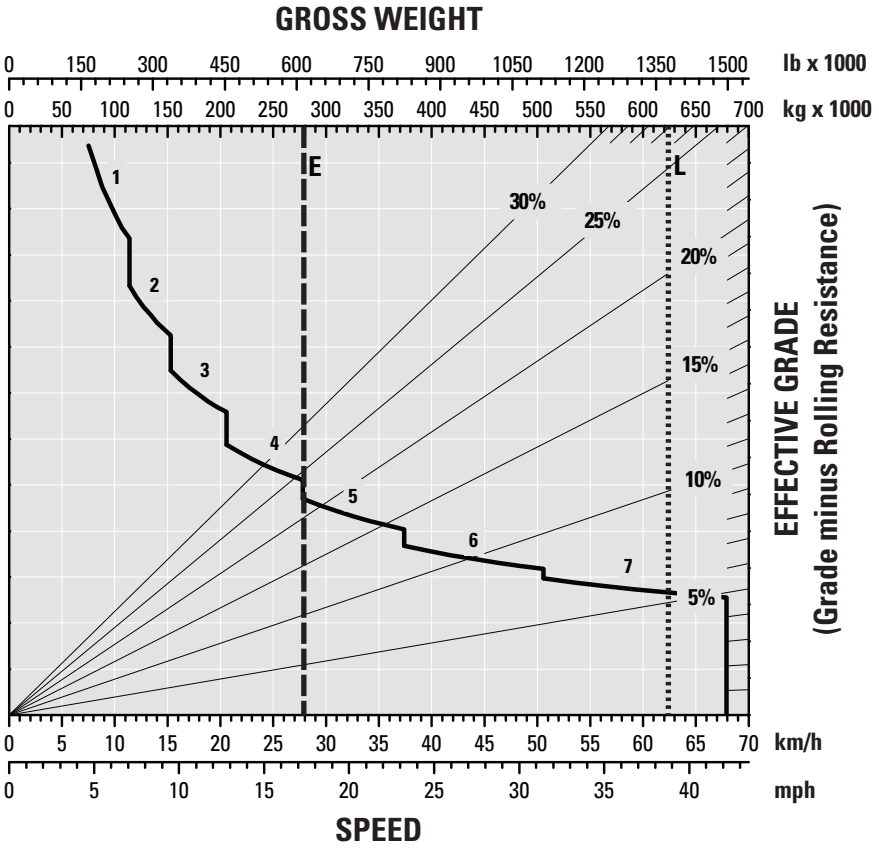

797F Steep (Downhill Haul) Retarding – 1500 m (4,900 ft)*

Typical Field Empty Weight

Gross Machine Operating Weight
623 690 kg (1,375,000 lb)

1 – 1st Gear
2 – 2nd Gear
3 – 3rd Gear
4 – 4th Gear
5 – 5th Gear
6 – 6th Gear

* at sea level

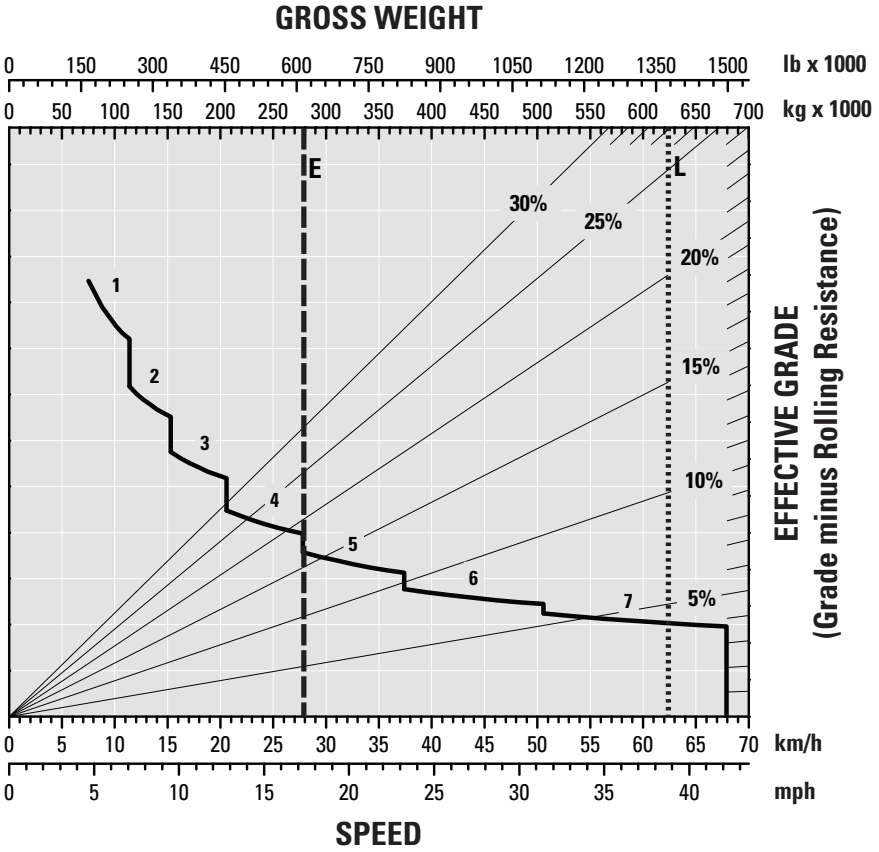

797F Shallow (Flat/Uphill Haul) Retarding – Continuous*

To determine retarding performance: Add lengths of all downhill segments and, using this total, refer to proper retarding chart. Read from gross weight down to the percent effective grade. Effective grade equals actual % grade minus 1% for each 10 kg/t (20 lb/ton) of rolling resistance. From this weight-effective grade point, read horizontally to the curve with the highest obtainable gear, then down to maximum descent speed brakes can properly handle without exceeding cooling capacity. The following charts are based on these conditions: 32° C (90° F) ambient temperature, at sea level, with 59/80R63 tires.

NOTE: Select the proper gear to maintain engine rpm at the highest possible level, without overspeeding the engine. If cooling oil overheats, reduce ground speed to allow transmission to shift to the next lower speed range.

Typical Field Empty Weight

Gross Machine Operating Weight
623 690 kg (1,375,000 lb)

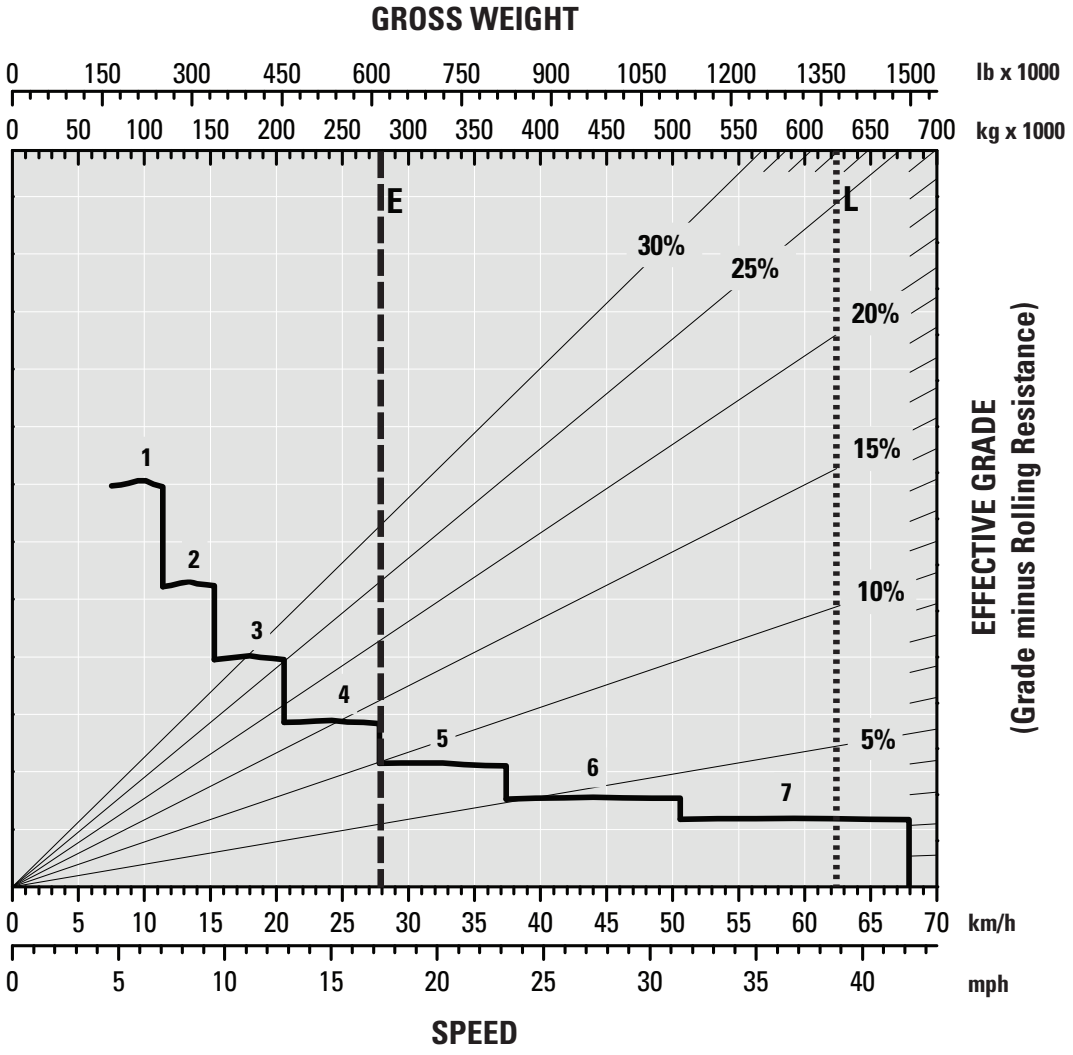

1 – 1st Gear
2 – 2nd Gear
3 – 3rd Gear
4 – 4th Gear
5 – 5th Gear
6 – 6th Gear

E – Empty
L – Loaded
*** at sea level**

797F Shallow (Flat/Uphill Haul) Retarding – 450 m (1,475 ft)*

Typical Field Empty Weight

Gross Machine Operating Weight
623 690 kg (1,375,000 lb)

1 – 1st Gear
2 – 2nd Gear
3 – 3rd Gear
4 – 4th Gear
5 – 5th Gear
6 – 6th Gear

* at sea level

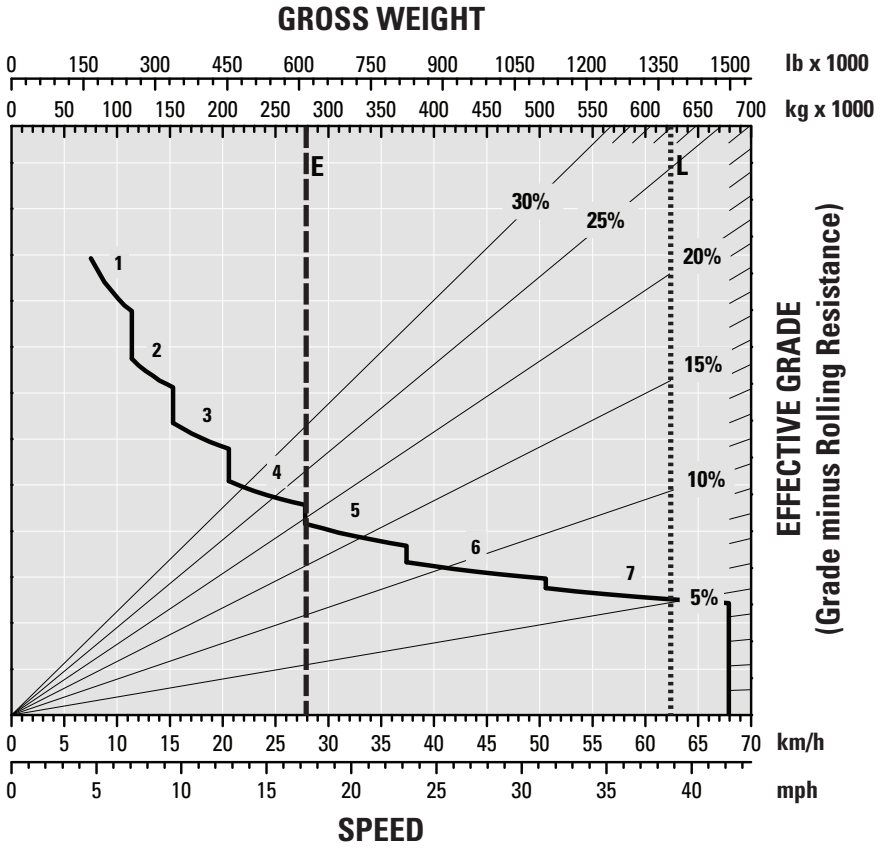

797F Shallow (Flat/Uphill Haul) Retarding – 1500 m (4,900 ft)*

Typical Field Empty Weight

Gross Machine Operating Weight
623 690 kg (1,375,000 lb)

1 – 1st Gear
2 – 2nd Gear
3 – 3rd Gear
4 – 4th Gear
5 – 5th Gear
6 – 6th Gear

* at sea level

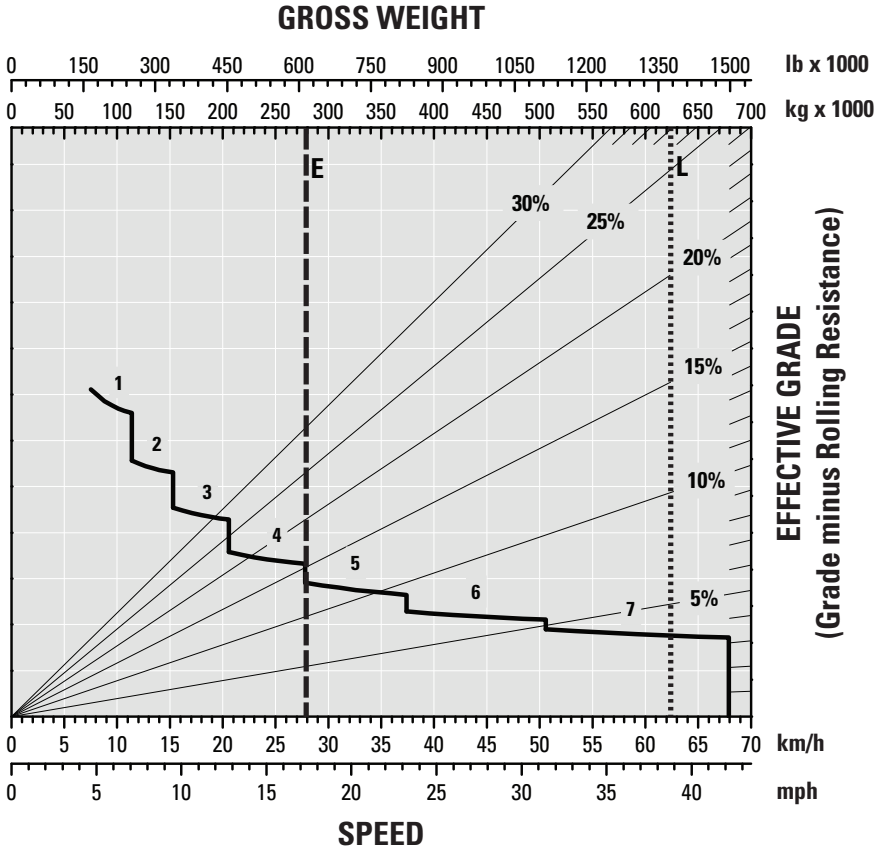

Standard equipment may vary. Consult your Cat dealer for details.

ELECTRICAL
- Alarm, back-up
- Brushless, alternator, 150 ampere
- Batteries, 12V (2) 93 amp-hour
- Converter, 12V electrical
- Electrical system, 24V, 10, 20 and 25 amp
- Battery charge receptacle
- Lighting system
  - Back-up and hazard lights
  - Directional signals (front, rear LED)
  - Front stair access/Service deck
  - Stop/tail lights (LED)
  - Engine compartment
  - VIMS, blue light (LED)
  - Headlights with lo-hi beam selector

OPERATOR ENVIRONMENT
- Air conditioner with automatic climate control
- 12V DC power supply (3)
- Coat hook
- Diagnostic connection port
- Dome courtesy light
- Entertainment radio ready 5 amp converter, speakers and wiring harness
- Gauges/Indicators:
  - Gauge panel
    - Transmission fluid temperature
    - Brake oil temperature
    - Engine coolant temperature
    - Fuel level
    - Torque converter oil temperature
  - Electric engine control fault indicator
  - Electric hour meter
  - Speedometer
  - Tachometer
  - Transmission gear indicator
  - VIMS message center with advisor
- Heater/defroster (11 070 kCal/43,930 Btu)
- Horn
- Integrated Object Detection System
- Storage compartments
- Hoist, body control (electric)
- ROPS cab, insulated/sound suppressed
- Seat, operator, air suspension
- Seatbelt, operator, three-points, retractable
- Seat, trainer, air suspension
- Seatbelt, trainer, two-points, retractable
- Stairway and walkway access, 600 mm (23.6 in)
- Steering wheel, multi tilt, padded, telescopic
- Tinted glass
- Window, operator, electric powered
- Windshield wiper, intermittent control and washer
- Cup holder
- Mirrors, right and left

POWER TRAIN
- C175-20 Tier 2 emissions compliant engine
  - Turbocharging (4)/Air-to-Air Aftercooler (ATAAC)
  - Air cleaner with precleaner (4)
  - Ground level engine shutdown
  - Ether starting aid (automatic)
  - Elevated low idle control
  - Crankcase protection
  - Multi-point oil pressure sensing
  - Automatic starter protection
- Braking system
  - Park brake integrated with gear selector
  - Brake release motor (towing)
  - Oil-cooled, multi-disc (front and rear) – service, retarding, parking, secondary
  - Automatic Retarder Control, adjustable
  - Engine overspeed protection
  - Extended life brake disc material
- Transmission
  - 7-speed, automatic powershift with electronic controls (ECPC)
  - Body-up shift inhibitor
  - Controlled throttle shifting
  - Directional shift management
  - Neutral coast inhibitor
  - Neutral start switch
  - Downshift/Reverse shift inhibitor
  - Individual clutch modulation
  - Body-up reverse neutralizer
  - Programmable top speed
  - Lock-up torque converter
- Pre-lubrication/engine
- Rear axle continuous lubrication/filtration

OTHER STANDARD EQUIPMENT
- Traction Control System
- Auto lubrication system
- Aux “buddy” dumping quick connect
- Aux steering quick connect (towing)
- Driveline guard
- Fast fill fuel system
- Fuel filter with water separator
- Ground level VIMS data port
- Ground level battery lockout
- Ground level transmission lockout
- Ground level engine start lockout
- Ground level engine shut-down
- High-speed crankcase oil change
- Reservoirs (3 separate)
  - Brake/Hoist, Steering/Fan, Transmission/Converter
- Rock ejectors
- Supplemental steering (automatic)
- Tie-down eyes
- Center hitch and tow points (front), tow pin (rear)
- Vandalism protection locks
- Vital Information Management System (VIMS)
  - Includes VIMS Payload Monitor with max payload and speed manager
- Hydraulic filters, 1,000 hour
- S·O·S^{SM} sample ports
- Service points, ground level
- Sight level gauges for hydraulic/engine oil

ANTIFREEZE
- Extended Life Coolant to –35° C (–30° F)

797F Optional Equipment

Optional equipment may vary. Consult your Cat dealer for details.

Work Area Vision Systems (WAVS)
Cabin Air Precleaner
Throttle Lock
Engine Delay Shutdown Timer
Antifreeze/Coolant Protects to –50° C (–58° F)
Fuel Tank (7570 L/2,000 gal)
SL-V Grease Injectors
Additional Retarding for Downhill Hauls
Body Heat
Rear Axle Lubrication Cooler
External Digital Payload Display
Oil Renewal System
Oil Renewal System with 3 Day Tank
Engine Coolant and Oil Heater for Cold Weather Starts
Road Analysis Control (RAC)
Portable Fire Extinguisher
Torque Converter Guard
Brake Wear Indicator Gauge
Rims (wedge)
Rim Guard

Notes

Notes

797F Mining Truck

For more complete information on Cat products, dealer services, and industry solutions, visit us on the web at **www.cat.com**

© 2010 Caterpillar Inc.
All rights reserved

AEHQ6039-02 (12-2010)
Replaces AEHQ6039-01

Materials and specifications are subject to change without notice. Featured machines in photos may include additional equipment. See your Cat dealer for available options.

CAT, CATERPILLAR, SAFETY.CAT.COM, their respective logos, “Caterpillar Yellow” and the “Power Edge” trade dress, as well as corporate and product identity used herein, are trademarks of Caterpillar and may not be used without permission.